BANNER BOX
PRINT SOLUTIONS

Banner Frames

Heavy Duty Frame

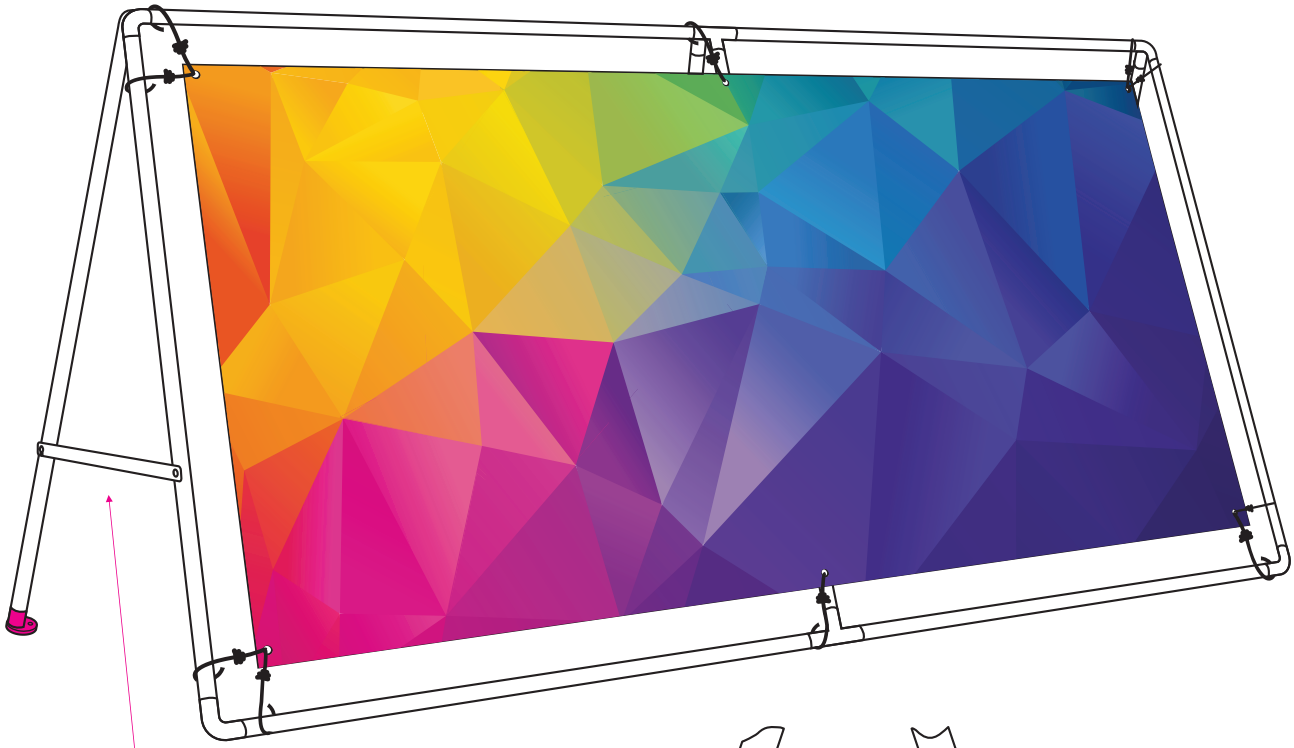

Tie-bar holds frame
in place at both ends

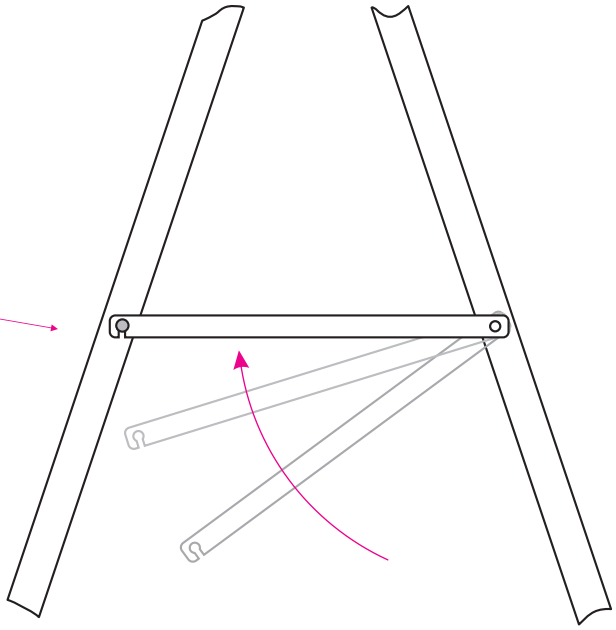

Telephone: 01246 472 949
Email: sales@bannerbox.co.uk

© Specialised Canvas Services Limited. All rights reserved.

Rev. Jan 2021

BANNER BOX
PRINT SOLUTIONS

Banner Frames

Heavy Duty Frame

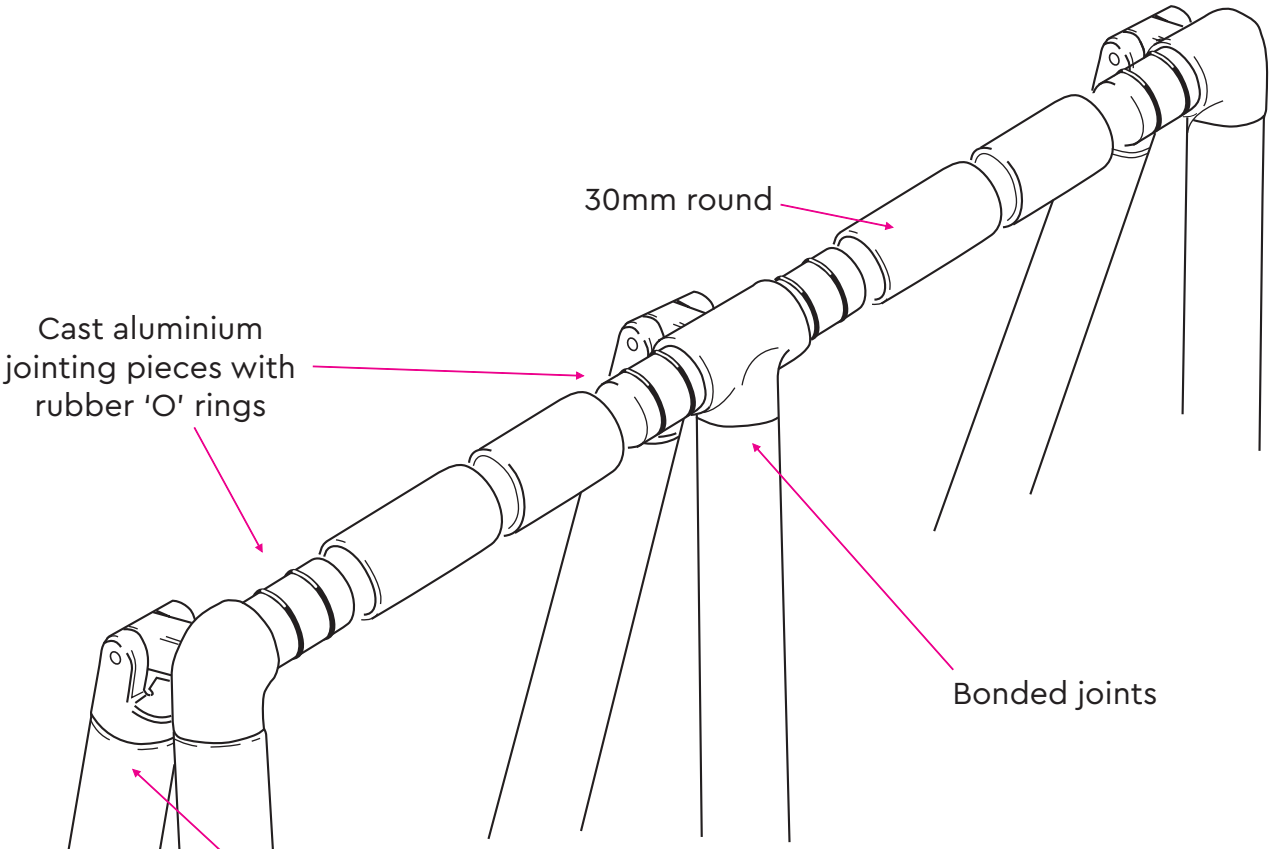

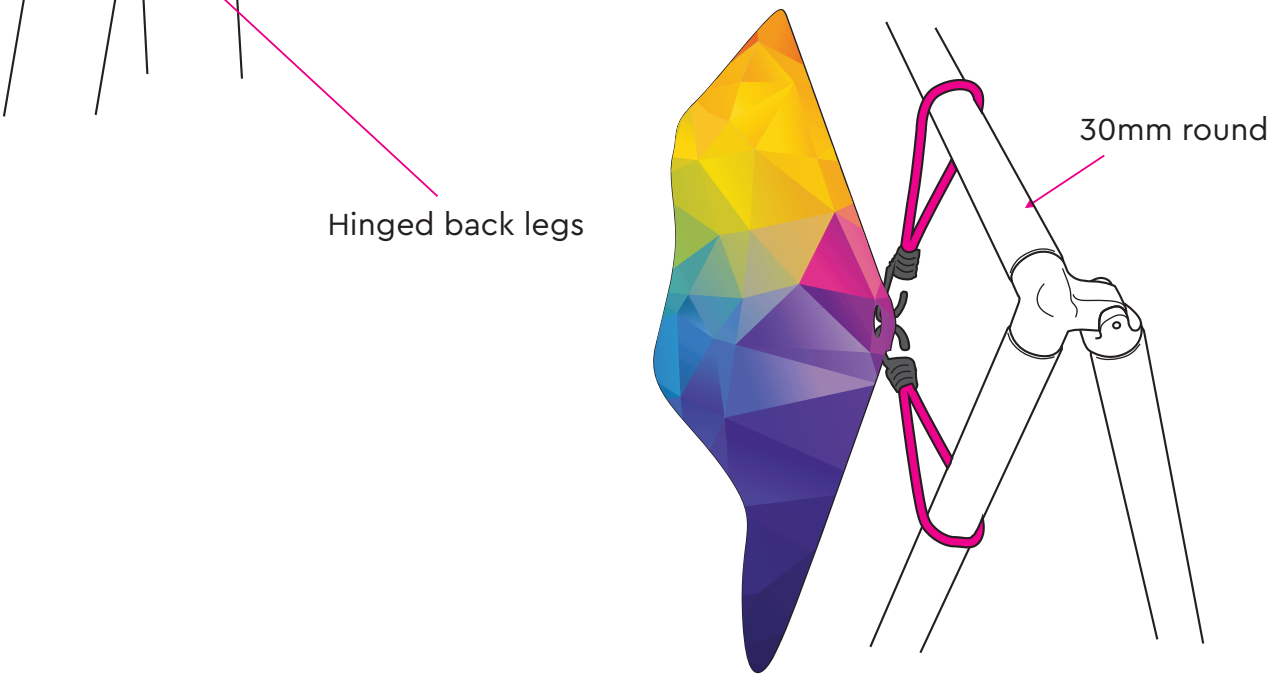

Telephone: 01246 472 949
Email: sales@bannerbox.co.uk

© Specialised Canvas Services Limited. All rights reserved.

Rev. Jan 2021

BANNER BOX
PRINT SOLUTIONS

Banner Frames

Heavy Duty Frame

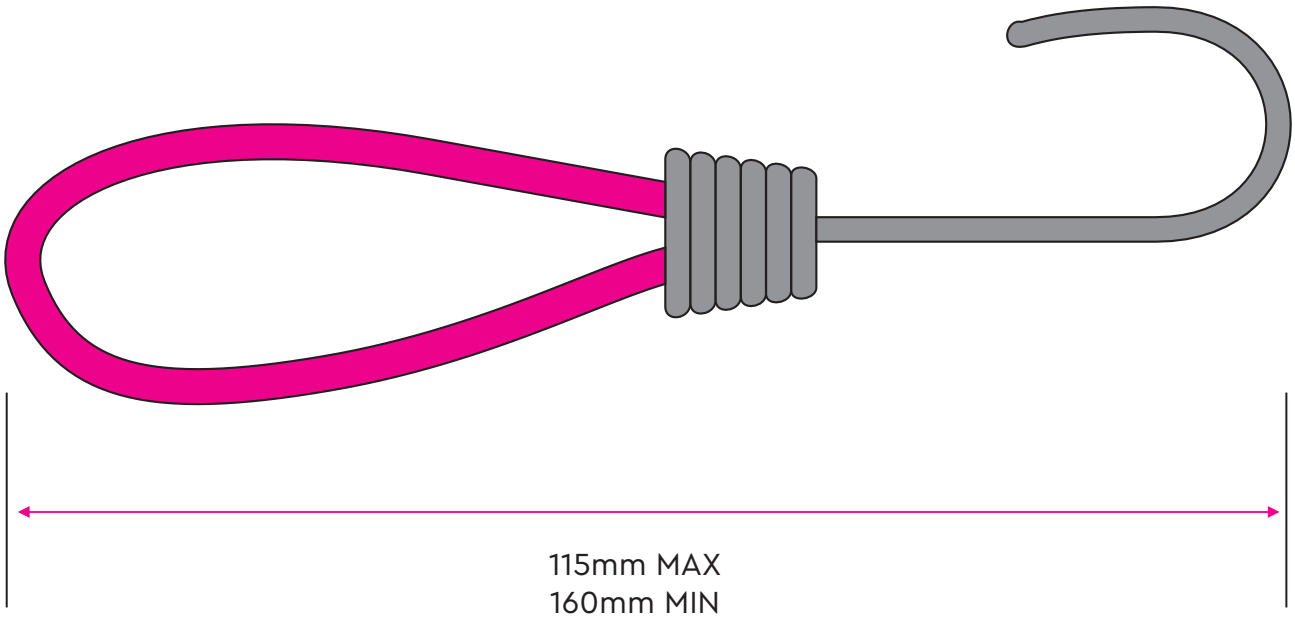

Provides 3" gap around banner to frame

Telephone: 01246 472 949
Email: sales@bannerbox.co.uk
© Specialised Canvas Services Limited. All rights reserved.
Rev. Jan 2021

BANNER BOX
PRINT SOLUTIONS

Banner Frames

Heavy Duty Frame

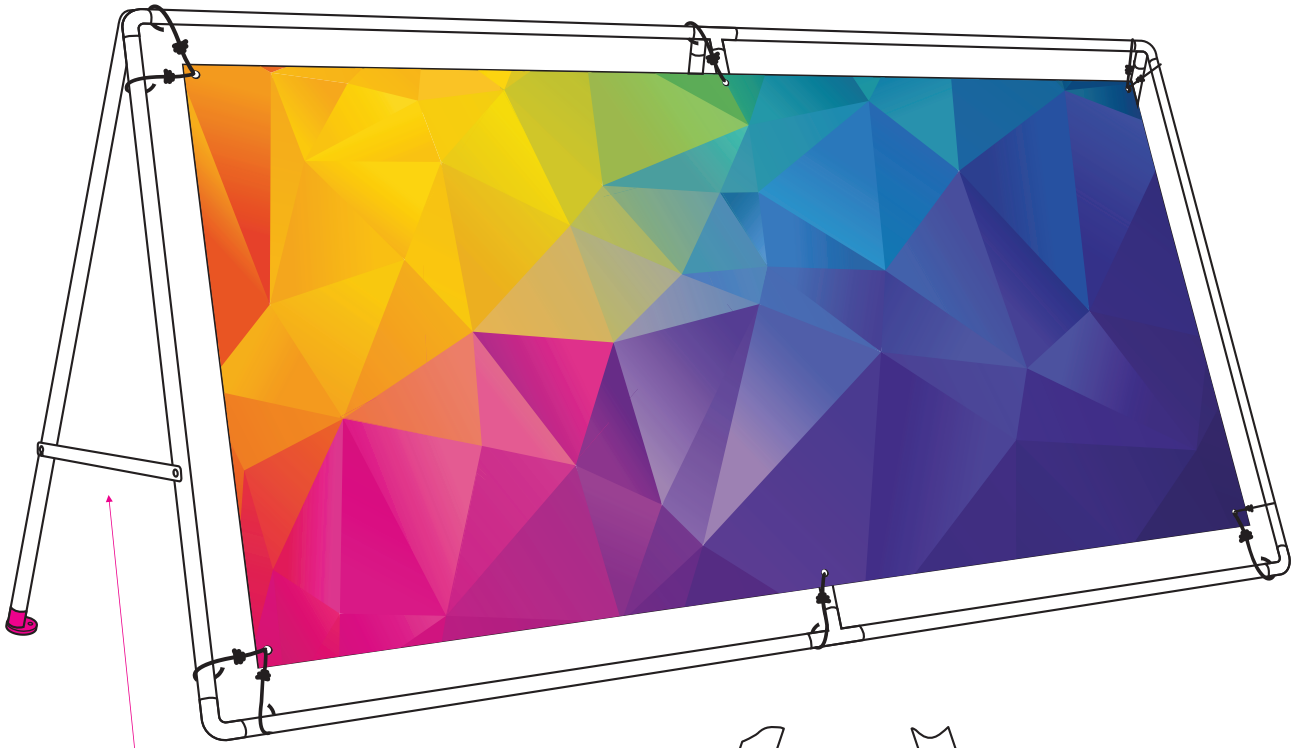

Tie-bar holds frame
in place at both ends

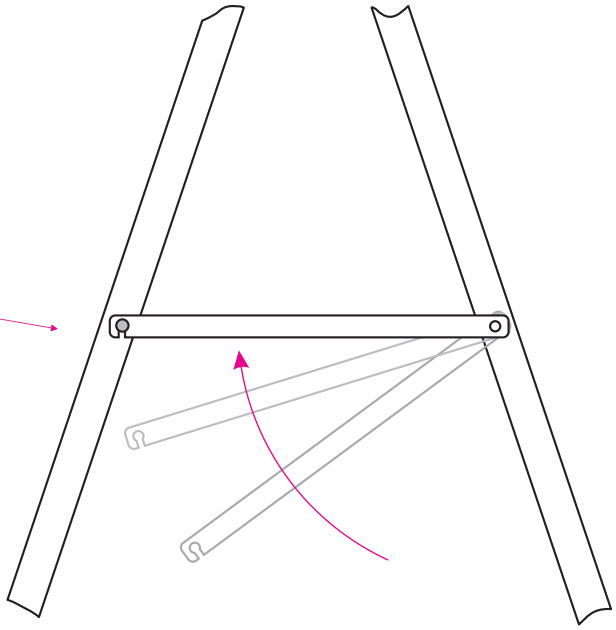

Telephone: 01246 472 949
Email: sales@bannerbox.co.uk

© Specialised Canvas Services Limited. All rights reserved.

Rev. Jan 2021

BANNER BOX
PRINT SOLUTIONS

Banner Frames

Heavy Duty Frame

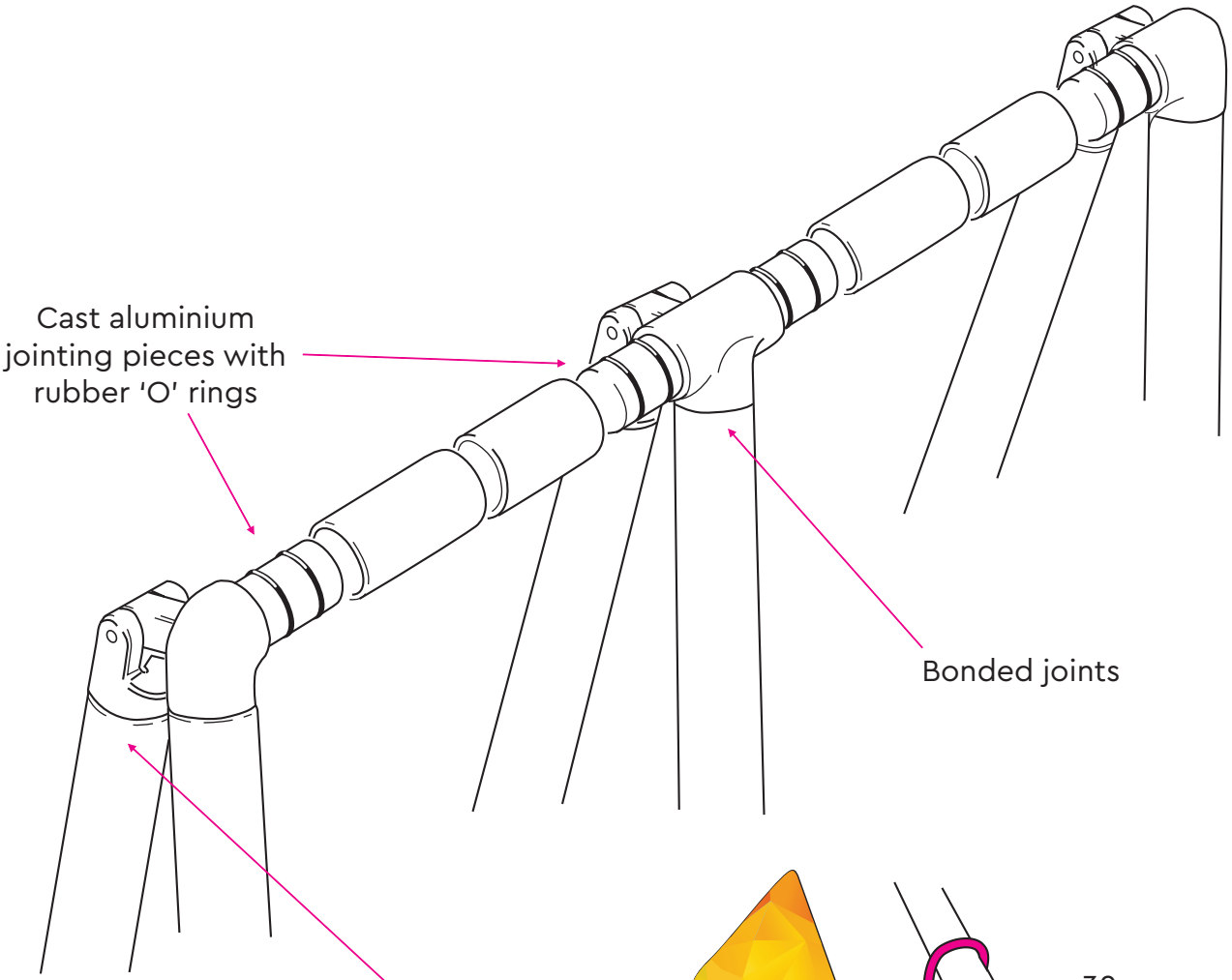

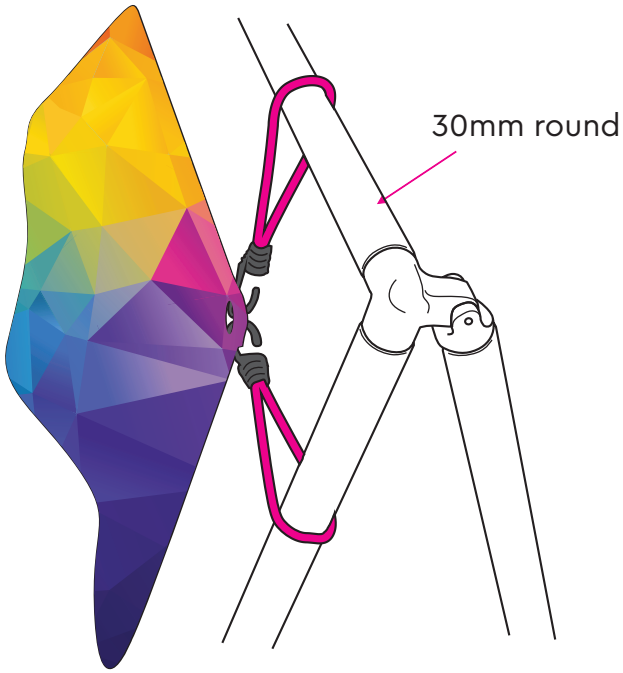

Telephone: 01246 472 949
Email: sales@bannerbox.co.uk

© Specialised Canvas Services Limited. All rights reserved.

Rev. Jan 2021

BANNER BOX
PRINT SOLUTIONS

Banner Frames

Heavy Duty Frame

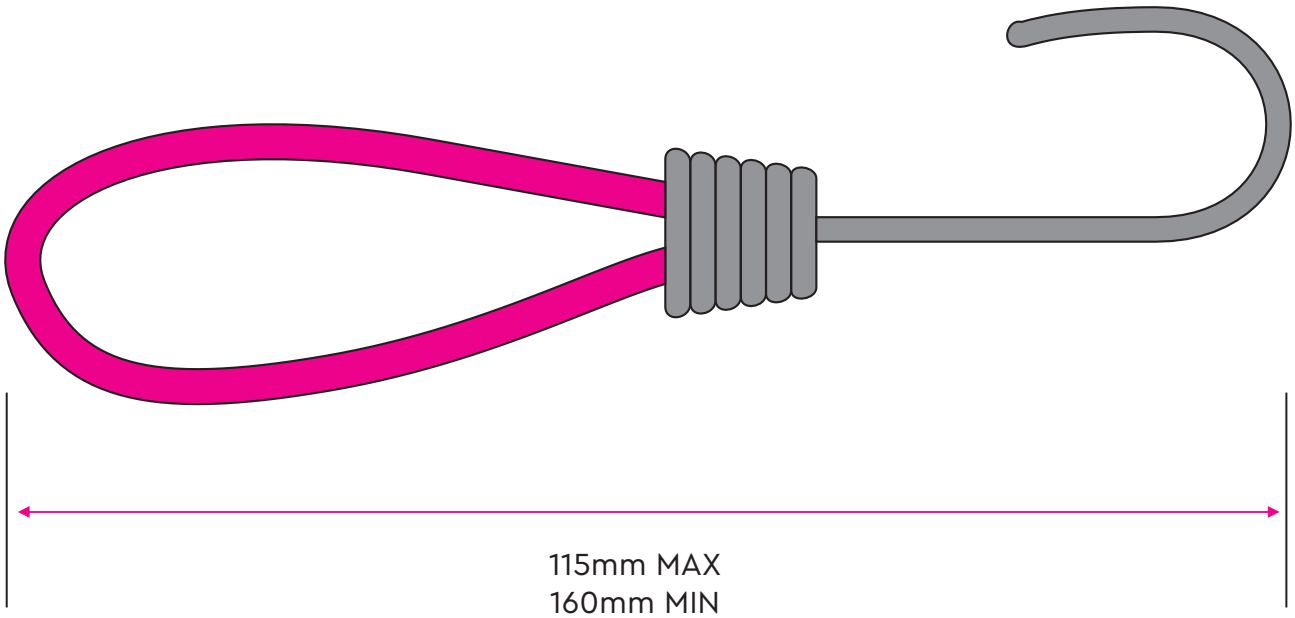

Provides 3" gap around banner to frame

Telephone: 01246 472 949
Email: sales@bannerbox.co.uk
© Specialised Canvas Services Limited. All rights reserved.
Rev. Jan 2021